ALPOLIC®
METAL COMPOSITE MATERIALS

MCM Building Code Fire Requirements

Provides an overview of metal composite materials (MCM), including uses and applications, with regard to code compliance and fire safety requirements.

Best Practices

BNP Media is a Registered Provider with The American Institute of Architects Continuing Education Systems. Credit earned on completion of this program will be reported to CES Records for AIA members. Certificates of Completion for non-AIA members are available on request.

This program is registered with the AIA/CES for continuing professional education. As such, it does not include content that may be deemed or construed to be an approval or endorsement by the AIA of any material of construction or any method or manner of handling, using, distributing, or dealing in any material or product.

AIA Continuing Education Provider

Copyright Materials

Learning Objectives

Explore definitions of noncombustibility.

Recognize the base elements of an exterior wall assembly, the characteristics of metal composite materials, and the impact on the design of exterior wall assemblies.

Review IBC requirements for MCM cladding.

Assess applicable fire testing per IBC for exterior wall assemblies, with a particular focus on the NFPA 285.

Discuss the role of engineering judgments and letters of equivalency.

Introduction

Metal composite material (MCM) is a versatile cladding material that gives building owners and designers practically any aesthetic and the ability to make complex forms with little weight while maintaining strength, rigidity, and flatness.

In North America, MCM cladding is used on thousands of projects, from gas station canopies, to single-family homes, to skyscrapers.

When used in accordance with the International Building Code, MCM is a versatile and safe solution for projects.

Understanding Combustibility

The definition changes across the globe.

Defining what is noncombustible is a matter of setting the conditions under which flaming DOES NOT occur.

There is no universally accepted definition of combustible in construction.

The tests for noncombustibility are very different in the U.S. compared to Japan, Canada, Australia, the European Union, etc.

Understanding Combustibility

What is combustibility?

Combustibility is about flaming, mass loss, and temperature rise.

The U.S. and Canada set limits on these criteria and use that to determine if a material can be classified as noncombustible.

In the U.S., the International Building Code (IBC) test ASTM E136 considers a material noncombustible if it has less than 50% mass loss and a temperature increase of less than 54°F with no flaming beyond the first 30 seconds in an oven set to 750°C.

In Canada, the UL/CAN S114 uses similar categories to define combustibility but with different limits. A material is noncombustible if it has less than 20% mass loss and a temperature increase of less than 36°C with no flaming beyond the first 30 seconds in an oven set to 750°C.

Metal Composite Materials

MCM

Metal composite materials (MCM) are produced by the continuous bonding of two thin (same or similar) metal skins, under heat, pressure, and tension, to either side of a thermoplastic core.

The thermoplastic core allows for uniform expansion and contraction of both metal skins, ensuring thermal stability and product performance.

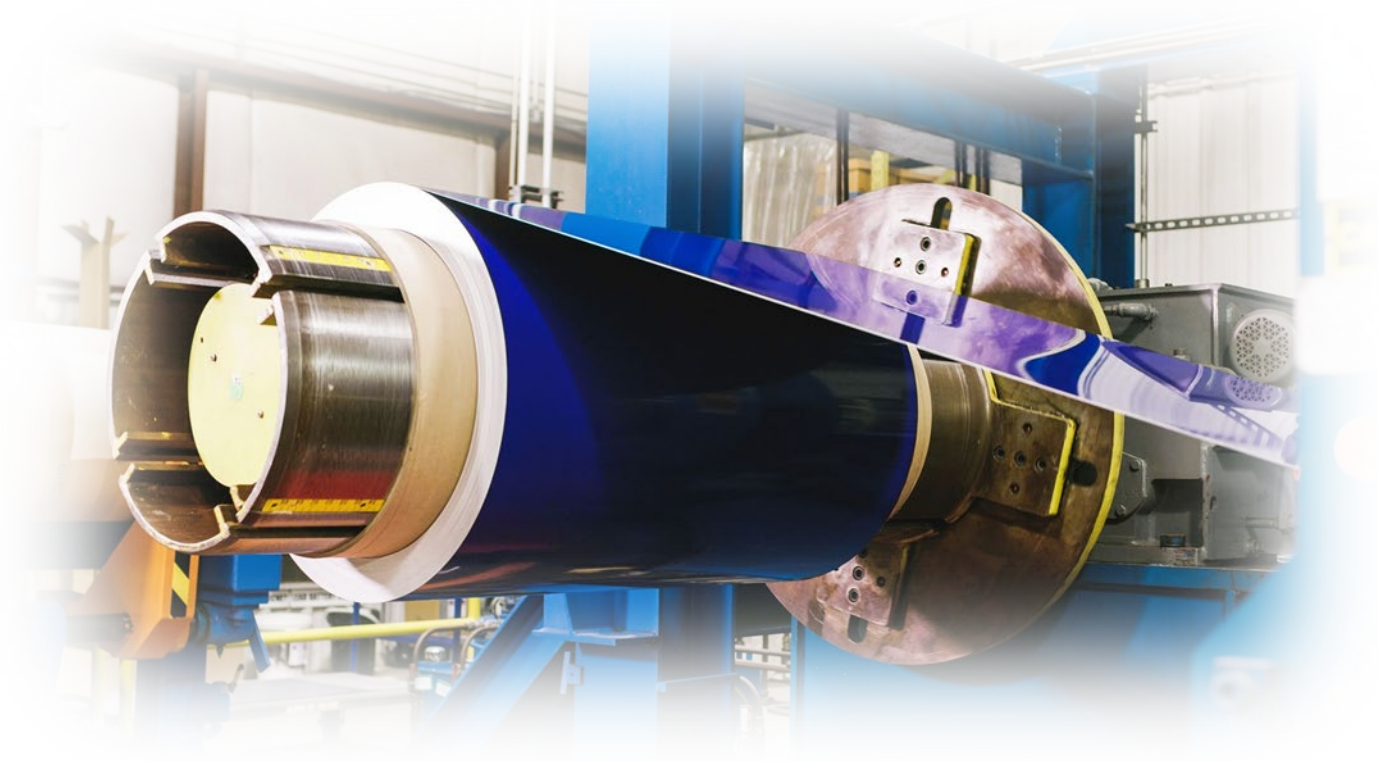

Metal Composite Materials

Versatile materials, distinguished appearance

MCM - Metal Composite Material: Aluminum (ACM), Stainless Steel (SCM), Titanium (TCM), Copper (CCM), Zinc (ZCM)

MCM offers the rigidity, superior flatness, and thermal stability of heavy-gauge metal sheet.

MCM has an excellent strength-to-weight ratio.

MCM is prefinished, flexible, lightweigh.t and can be prefabricated or curved, with the exception of anodized MCM.

MCM is used as a metal-faced cladding material for exterior and interior applications: for walls, ceilings, canopies, beam wraps, column cladding, fixturing, free-standing kiosks and signage.

Structure of MCM

Painted MCM

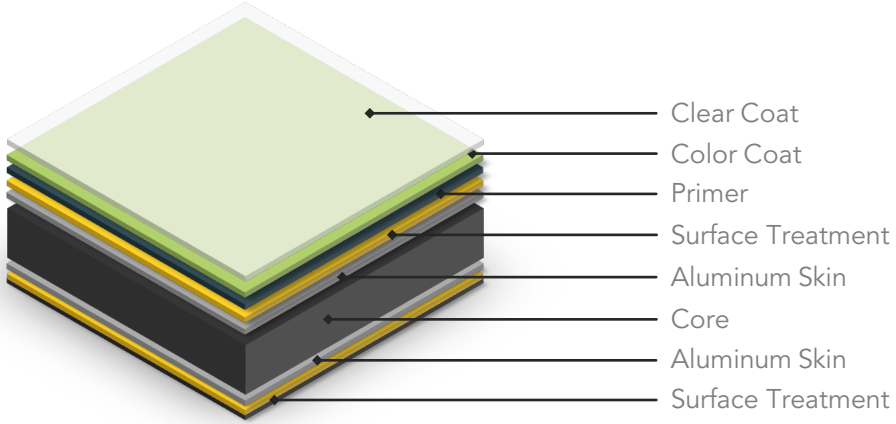

Natural Metals

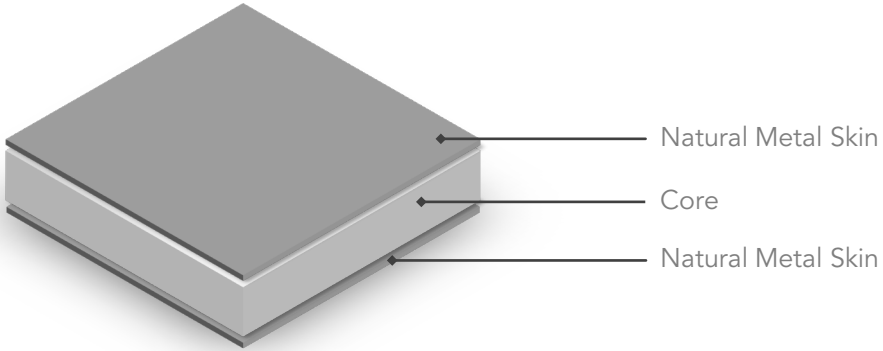

Types of Core Material

The thermoplastic core allows the production of a sheet that is lighter in weight and easier to fabricate, with superior flatness and durability compared to other cladding materials.

There are two types of cores, polyethylene and a fire-resistant mineral fill, which we refer to as **PE** and **FR**. The different cores provide the same variety of attractive finishes, structural performance benefits, and come in the same dimensions.

Both cores are regulated by the IBC and can be rated Class A under the ASTM E84 and the CAN/ULC-S102.

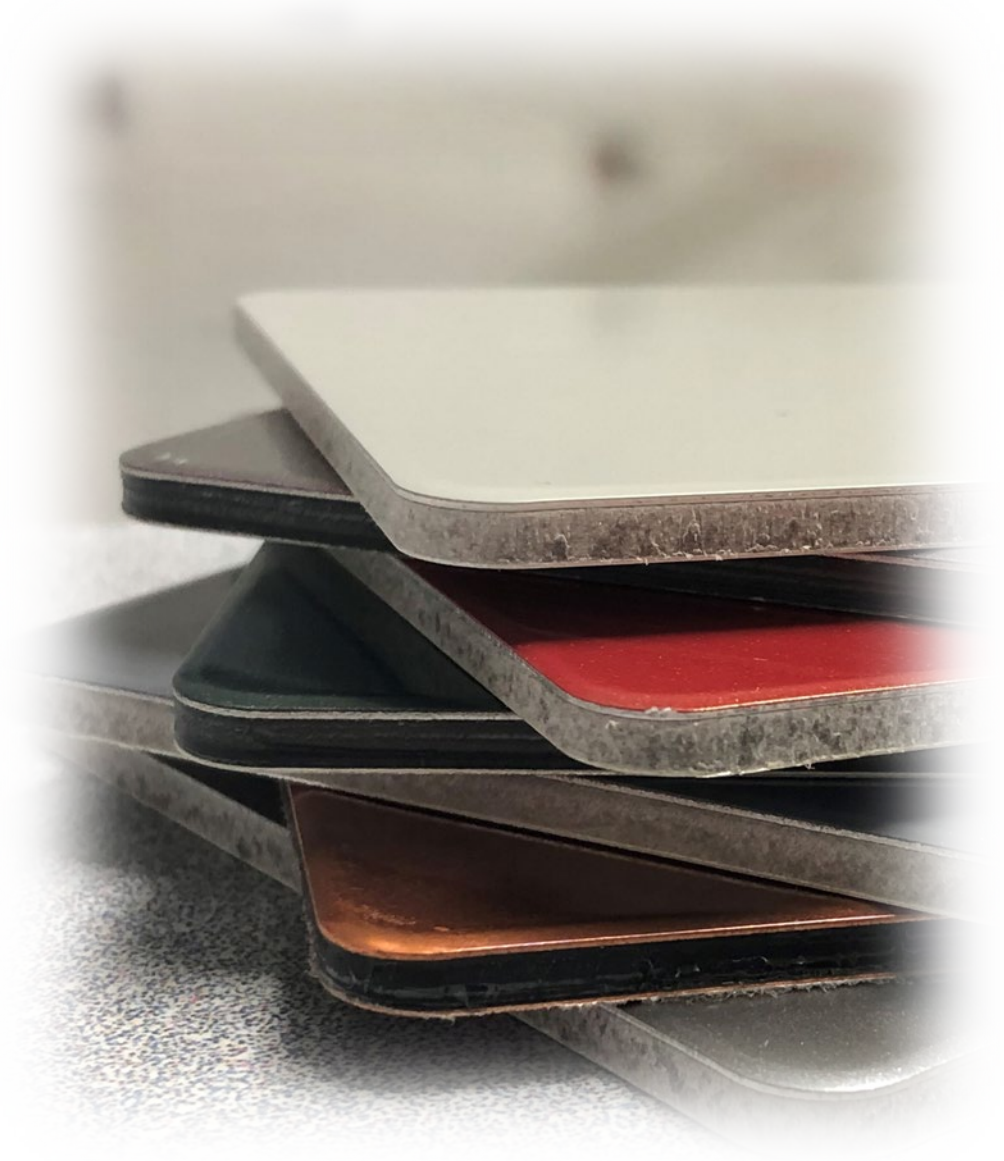

Cladding Systems

Cladding provides visual appeal to buildings and these non-load bearing wall systems also act as the first layer of protection against air and water penetration into a building.

Cladding systems fall into one of two general categories, sealed and rainscreen.

Exterior Attachment Systems

SEALED

Wet Seal

Open joint system sealed with caulk and backer rod, watertight

Most economical

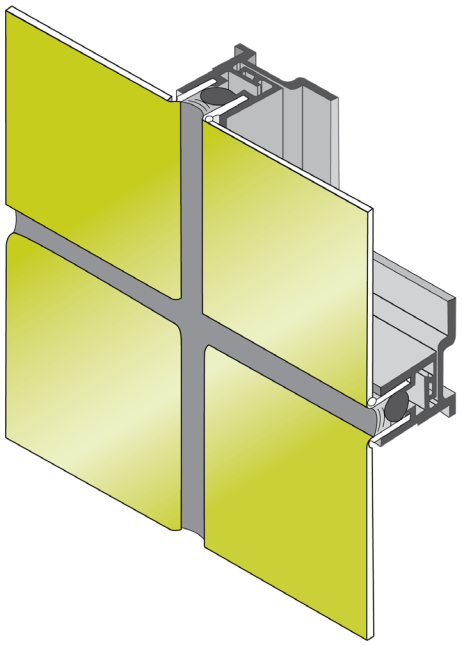

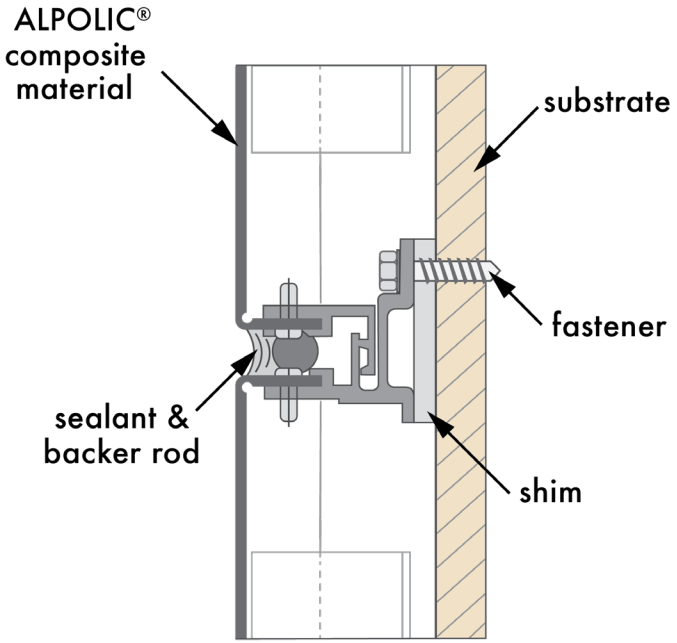

Exterior Attachment Systems

SEALED

Dry Seal

Open joint system with gasket and/or filler strip, watertight

Typically the most expensive system

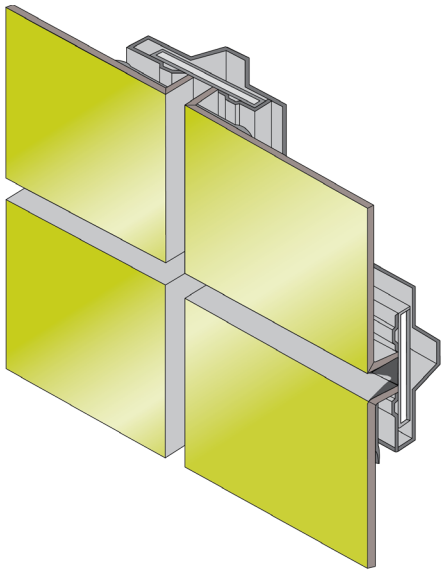

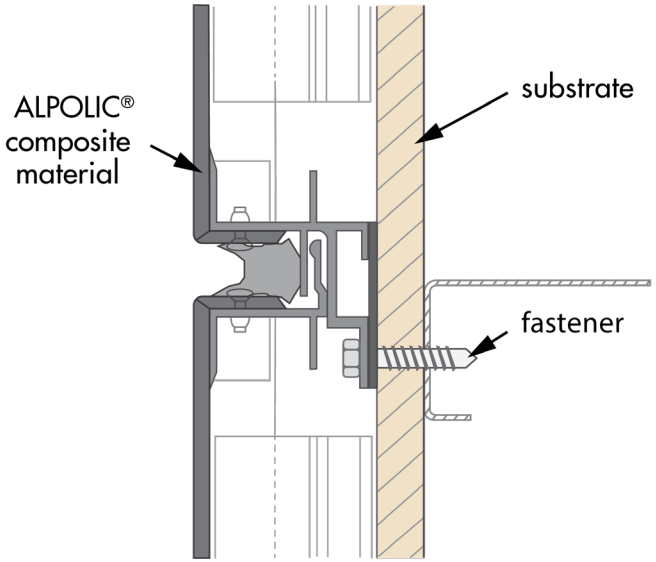

Exterior Attachment Systems

RAIN SCREEN

Pressure Equalized:

Minimized pressure differential on the inside and outside of the exterior cladding. Design allows for the control of water and moisture entering and draining from the wall cavity.

AAMA 508, a pass/fail standard, which tests pressure equalization, substrate wetting, and water drainage.

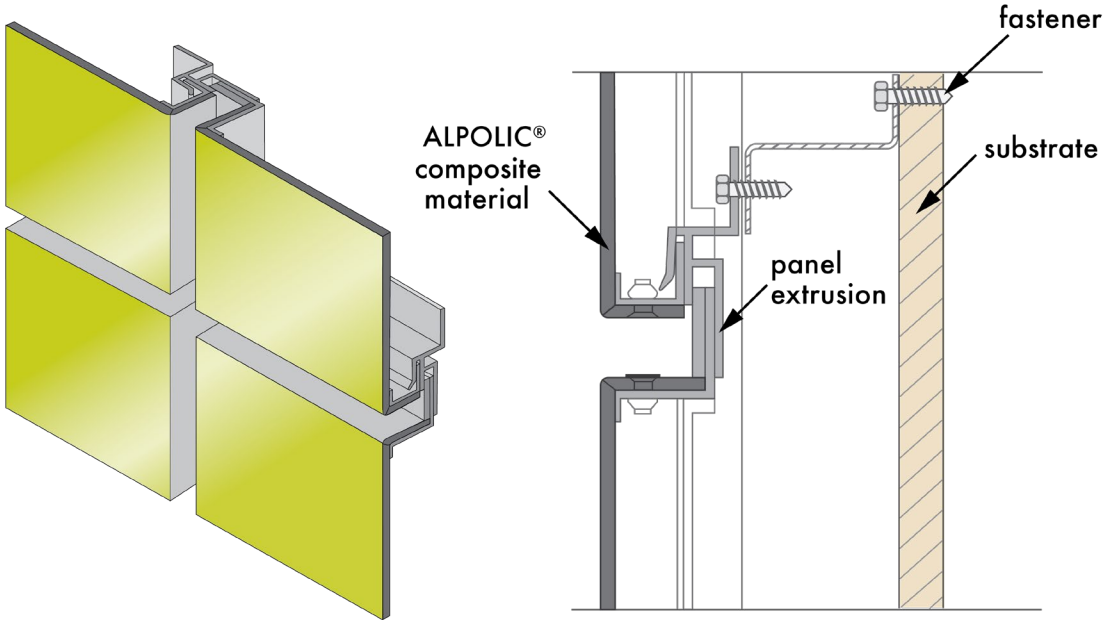

Exterior Attachment Systems

Drained Back Ventilated:

Design allows for water and moisture to enter and drain from the wall cavity.

AAMA 509 does not have a pass/fail criteria. The standard defines the ventilation and water resistance performance of a DBVR system. It ranks air and water infiltration on a scale of 1-10.

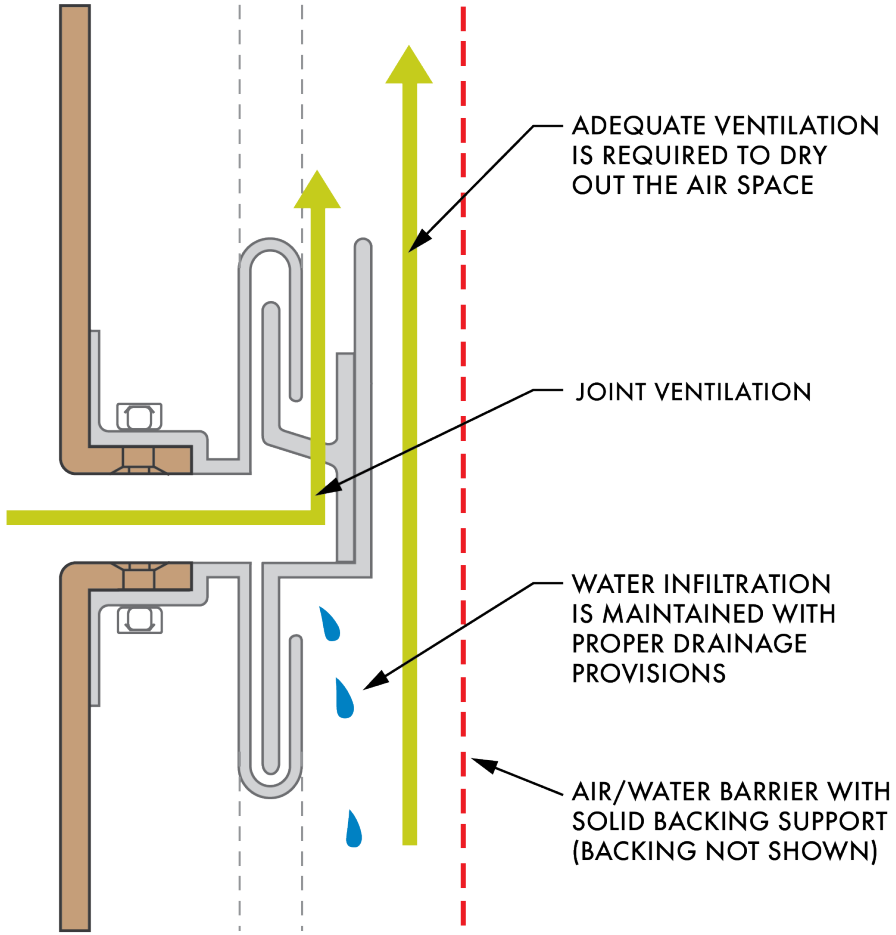

Cladding Systems

All components of the wall system must be considered for fire safety.

Think of all the component parts that separate inside air from outside air.

MCM may be the face of a wall, but several products contribute to the assembly's combustibility, such as the insulation, the air-water barrier (AWB), and the substrate.

Energy Efficiency vs. Fire Performance

The choice in continuous insulation has become increasingly focused on energy efficiency. Certain spray foams can be particularly good at limiting air flow through a wall assembly, with near-zero permeability ratings. In addition, the R-value, a measure of thermal resistance, is quite high. Mineral fiber requires more depth for the same R-value and can be 50 times more permeable.

All insulation used in MCM cladding should be tested per NFPA 285 for fire performance.

Innovative Materials, Used Safely

The building envelope must respond to environmental challenges, managing how water, air, and heat move, and it must perform this function safely. **No construction is without risk, but the building code lays out allowable procedures to mitigate that risk.**

Advancements in building materials and construction have allowed us to strive for greater energy efficiency, sustainability, and dynamic designs, and the building codes have adapted to ensure these new products and techniques are still used to create safe wall assemblies.

Building to Code

Building codes are lengthy and complex, making them intimidating to review. However, they provide the guidelines for a successful and safe build. Strict adherence to building codes in the United States and Canada have helped to mitigate catastrophic cladding failures found elsewhere around the world.

In the U.S., the model building code is the International Building Code (IBC).

IBC Section 1406 covers Metal Composite Material.

Be sure to check local codes that may differ from the IBC.

Testing

ASTM E136

Found in Section 703.5 it's the test to determine "noncombustibility". Anything NOT passing this test is considered by code to be combustible. This is a material test. Canadian equivalent S114.

ASTM E84

Found in Sections 1406.9 and 1406.10, it's a surface burning test which establishes a Flame Spread Index and a Smoke Development Index. This is a material test. Allowable limits are set on both indexes to allow MCM use in noncombustible construction. Requirements for MCM include a flame spread index of 25 or less and a smoke developed index of 450 or less. Canadian equivalent UL 723.

Testing

ASTM D1929

Found in 1406.11 is the test to determine self-ignition temperatures. Limits are required to qualify for "Alternate Conditions."

Canadian equivalents for the above three tests are UL/CAN S114 and S102.

Testing-NFPA 285

NFPA 285

Found in Section 1406.10, this is the test to determine MCM use in noncombustible construction. This is an assembly test and is required of wall assemblies that include combustible elements if used in noncombustible construction.

The NFPA 285 is a well-recognized test in a controlled environment. The NFPA 285 test simulates an event where the flame will shatter the window and spread from the room to the open air for more oxygen along the external wall.

Testing- NFPA 285

Changes

1998- NFPA 285 1st edition.

2006- NFPA 285 2nd edition. Formatting changes. Revised sample details. Revised documentation and instrumentation.

2012- NFPA 285 3rd Edition. Classifications and corrections. Added details and requirements for additional wall systems.

2019- Both bearing and non-load bearing assemblies now included. The scope now applies to buildings of any construction type. Updated to address joint and seam locations and window header construction.

Testing- NFPA 285 setup

Gas burner #1
- Interior of first story

Gas burner #2
- Exterior of rough opening (simulated window without the glass plane for safety reasons)
- Ignited five minutes after test initiation

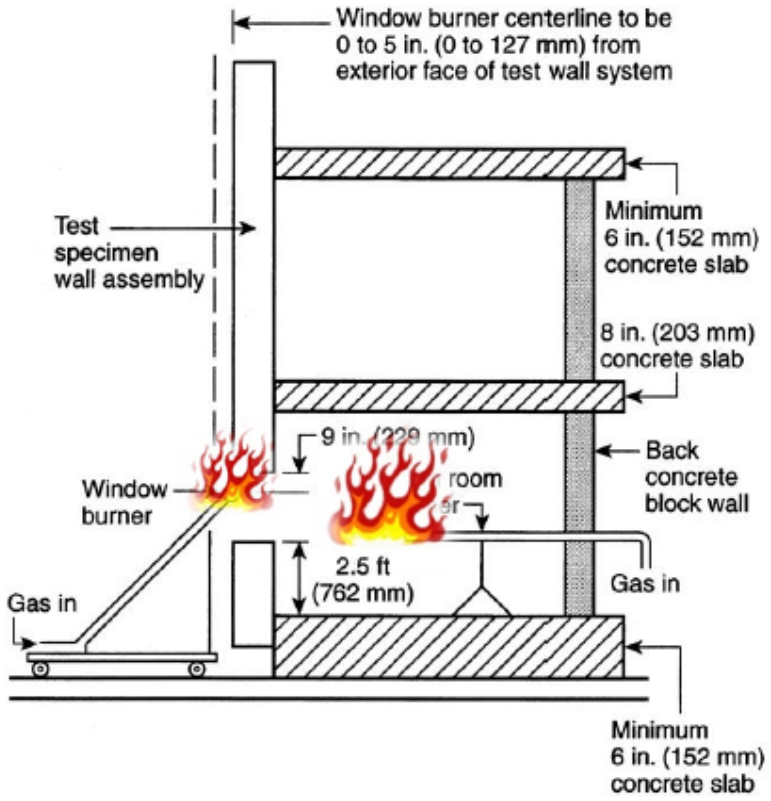

Testing- NFPA 285 setup

Front view of test specimen superimposed over test apparatus thermocouple locations.

- ● **Thermocouples – 1 in. (25 mm) from exterior wall surface**
- ○ **Thermocouples – In the wall cavity air space or the insulation, or both as shown**
- **( ) Thermocouples – Additional thermocouples in the insulation or the stud cavity, or both, where required for the test specimen construction being tested, as shown.**

Figures not to scale

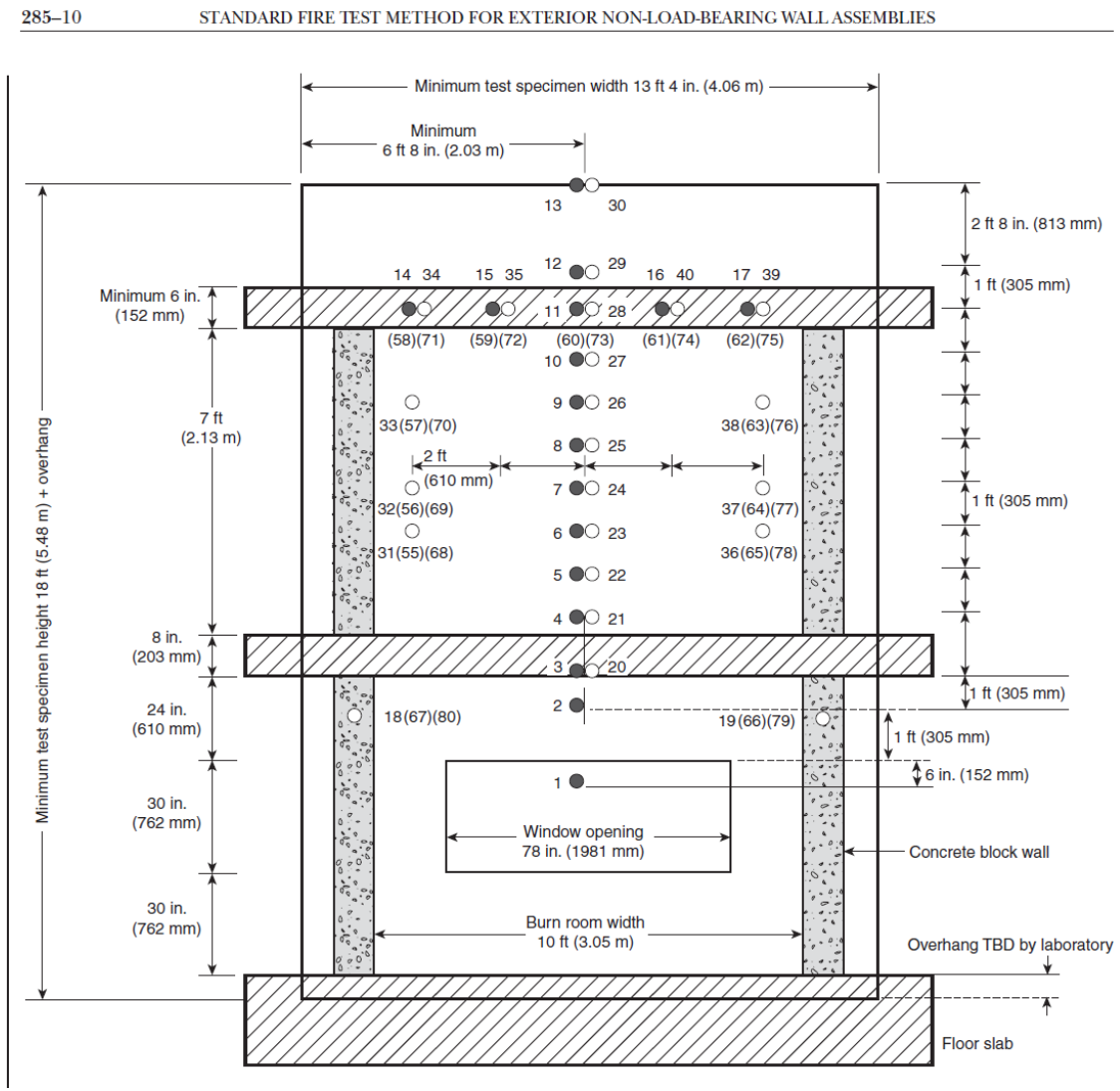

Testing- NFPA 285

Test Procedure

- Recording equipment started.
- Ambient conditions documented.
- In-room burner ignited for 5 minutes.
- Window burner ignited.
- Burn energy increased at 5-minute intervals.
- 30 minutes burn complete.
- 10-minute observation period.
- Observe back of wall panel and front of wall sheathing.

Testing- NFPA 285

Passing

- Temperature at 10 feet above opening should not exceed 1000º F
- Flame propagation shall not occur beyond flame plume.
- Vertical flame propagation of components/ insulation shall not occur.
- Horizontal flame propagation of components/ insulation shall not occur.
- Temperature rise in second story shall not exceed 500º F
- No flames in second story.
- No flames beyond intersection of test sample and test apparatus.

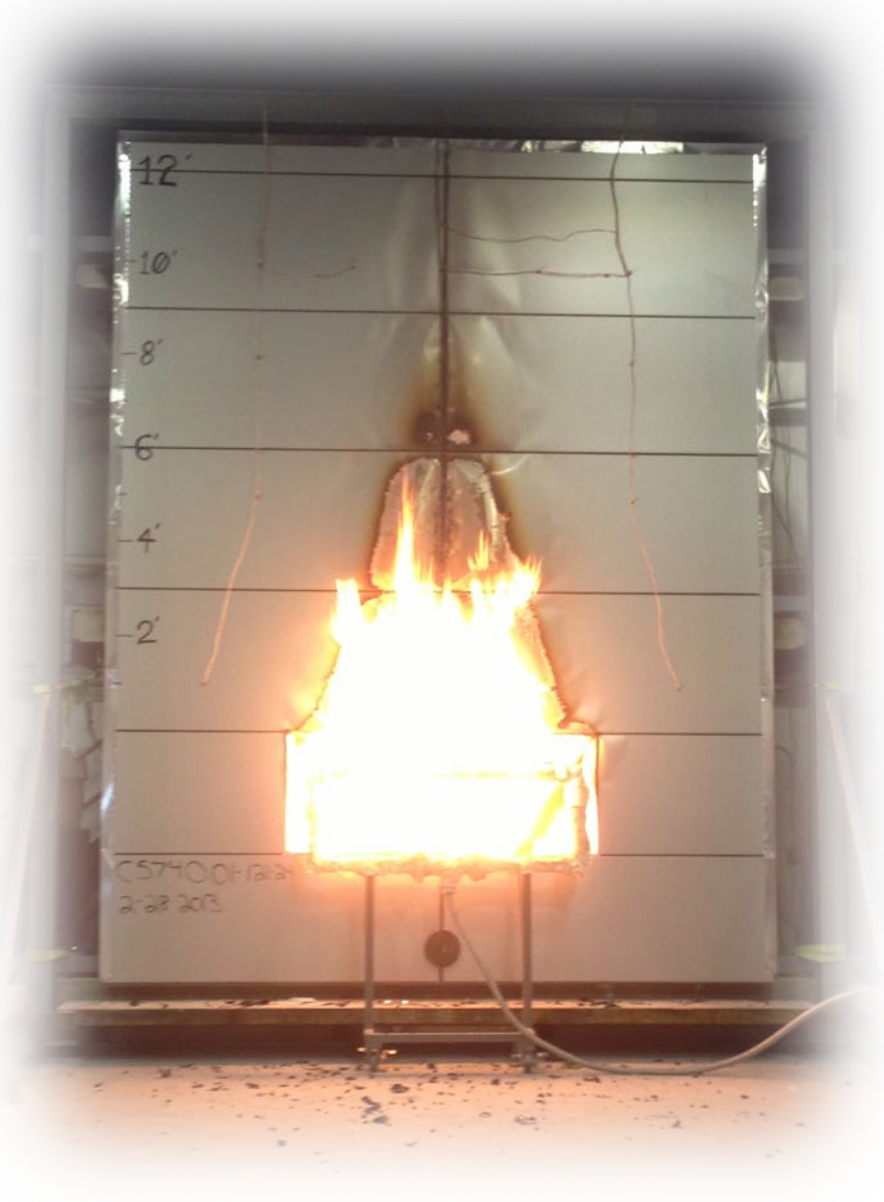

Testing- NFPA 285

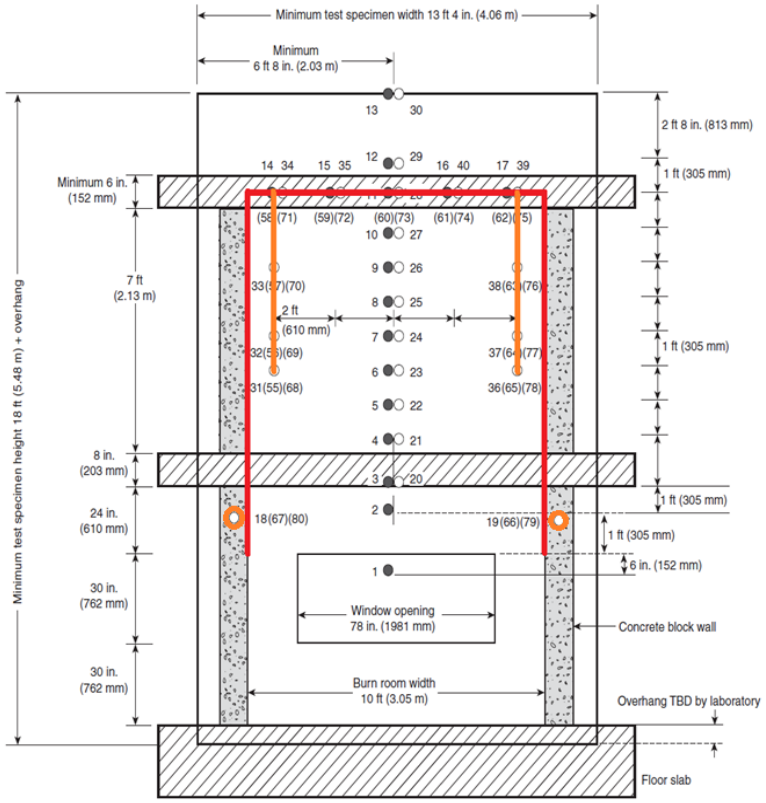

● Thermocouples — 1 in. (25 mm) from exterior wall surface

○ Thermocouples — In the wall cavity air space or the insulation, or both, as shown in Figure 6.1(b) Details A through I.

( ) Thermocouples — Additional thermocouples in the insulation or the stud cavity, or both, where required for the test specimen construction being tested, as shown in Figure 6.1(b) Details C through I.

Figure not to scale

FIGURE 6.1(a) Front View of Test Specimen Superimposed over Test Apparatus Thermocouple Locations.

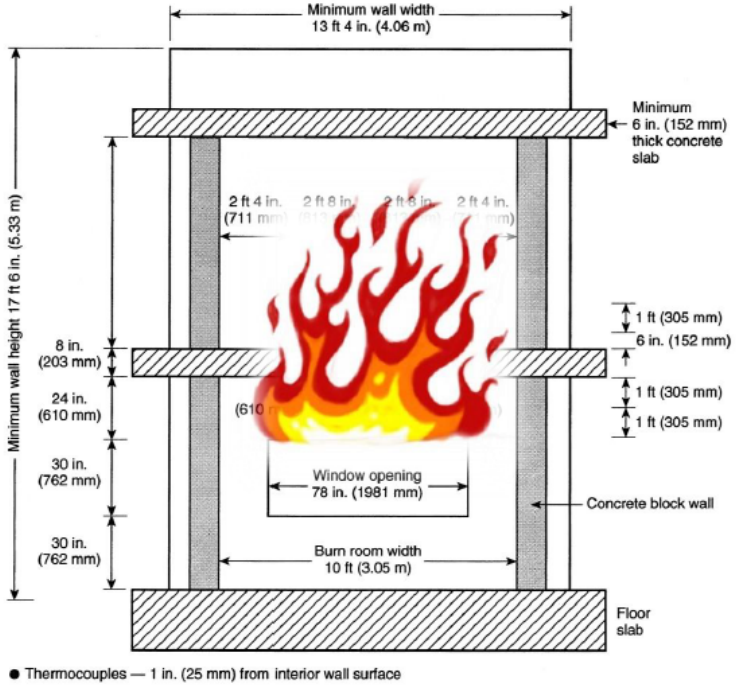

Interior section of testing apparatus

Testing- NFPA 285

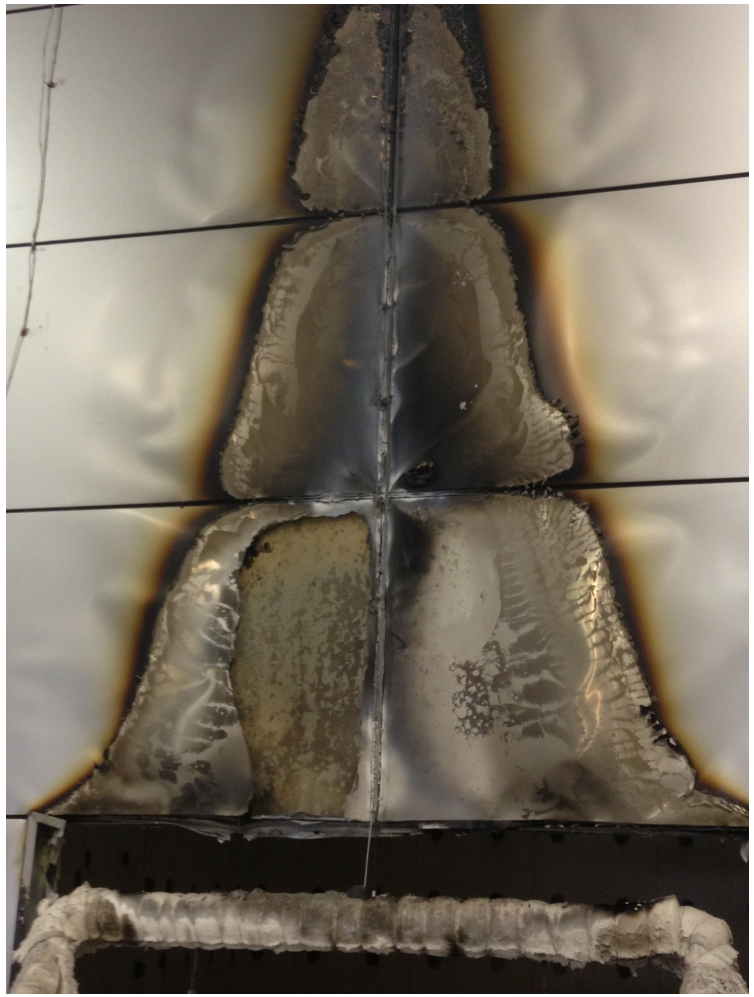

Testing- NFPA 285

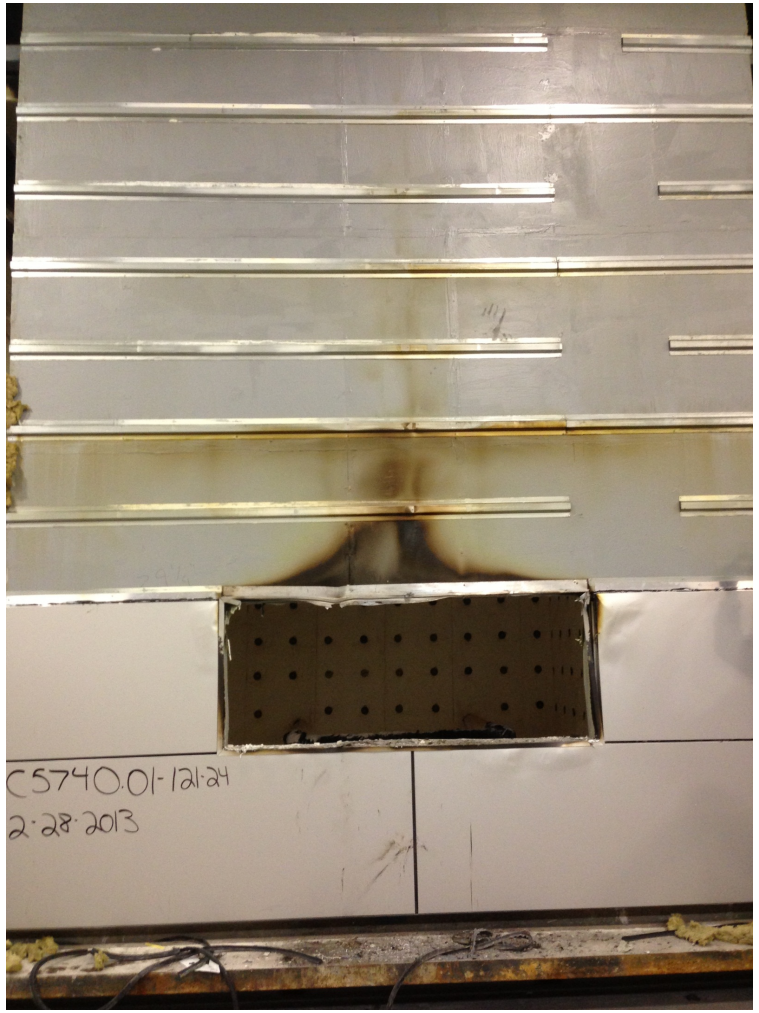

NFPA 285

(ISMA Test)

The NFPA 285 is a well-recognized mock-up test in a controlled environment. The NFPA 285 test simulates an event where the flame will shatter the window and spread from the room to the open air for more oxygen along the external wall.

The mock-up is 18 feet high, consisting of two stories. There are two sets of gas burners: inside the room and outside the window. During the 30 min. test, the flame height and wall temperature are checked. If the flame does not reach the second floor during the test time, the material passes.

Test apparatus

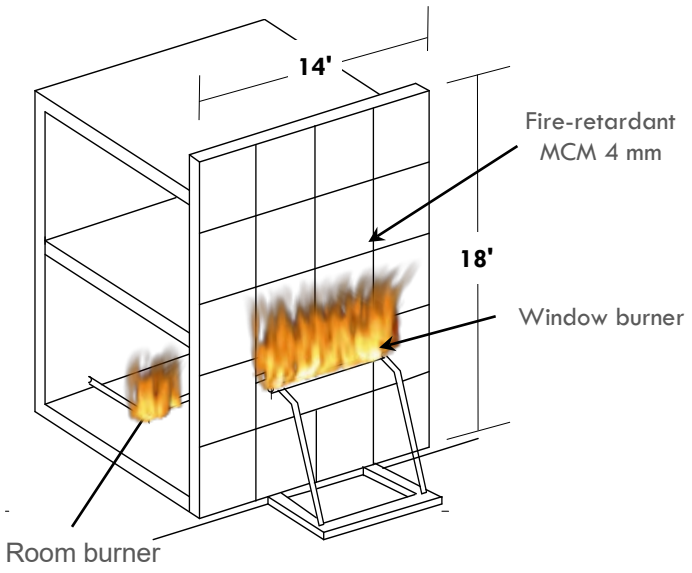

Fixating method

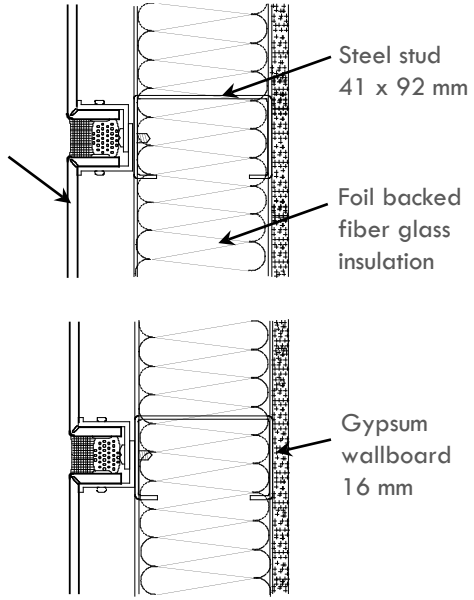

Test duration: 30 min.
Pass/Fail: No spread of flame beyond the area directly exposed to flame from fire source.

NFPA 285

(ISMA Test)

Left:
Mock-up of fire-retardant MCM panels before the test. The mock-up is 2 floors at
18 feet high and the window burner is positioned in the center of the ground floor.

Right:
The panel 7 minutes after ignition. Within 7 minutes, nothing happens with fire-retardant MCM panels.

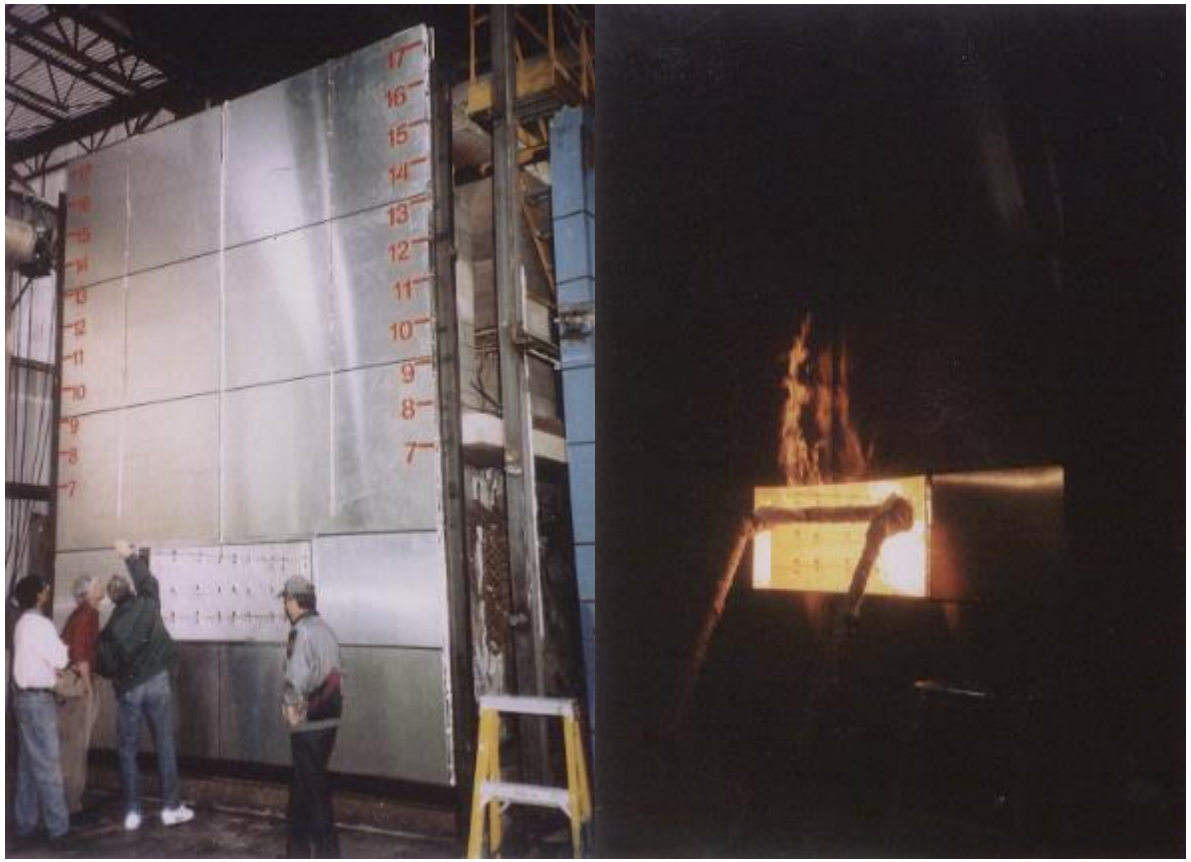

Before ignition 7 minutes after ignition

NFPA 285

(ISMA Test)

From 15 to 30 minutes, a part of fire-retardant MCM panels starts burning, but the flame remains in a limited range and it does not spread upward.

After 30 minutes, when the gas supply is shut off, the flame weakens due to the self-extinguishing FR material.

15 minutes after ignition

25 minutes after ignition

CAN/ULC-S134

(Canadian Full-Scale Exterior Wall Fire Test)

The fire test for Canada is similar to the NFPA 285 test, but the mock-up size is larger; 7.3 meters (24 feet) high by 6 meters (20 feet) wide.

In this test, the flame height and the intensity of heat flow are checked. The flame should not exceed 5 meters (16 feet) high. The test period is 25 minutes.

CAN/ULC-S134-13
Wall assemblies near the start of the fire test.

Letters of Equivalency / Engineering Judgements

Because the NFPA 285 tests the entire wall assembly, there are innumerable combinations of materials and attachment systems. Conducting a separate test for each separate assembly is costly and time-consuming.

Engineering judgments evaluate material substitutions to ensure that there is no added fire risk to the assembly that was tested to the NFPA 285.

Letters of Equivalency / Engineering Judgements

Contractors are turning to independent fire consultants for Equivalence Reports or Engineering Judgements that provide guidance for untested configurations.

Some parameters to be reviewed are :

- Cavity depth
- Types of insulation
- Types of weather resistive barriers
- Types of sheathing
- Mounting extrusions

Construction Types

There are five construction types for buildings, and FR material can be used in NFPA 285-tested wall assemblies in all types and all heights.

PE material can be used in all types with builds under 40 feet from grade and with a 5-foot separation between buildings.

Any building construction type over 40 feet must use MCM with an FR core material to pass the NFPA 285 and meet building codes.

Wall Types

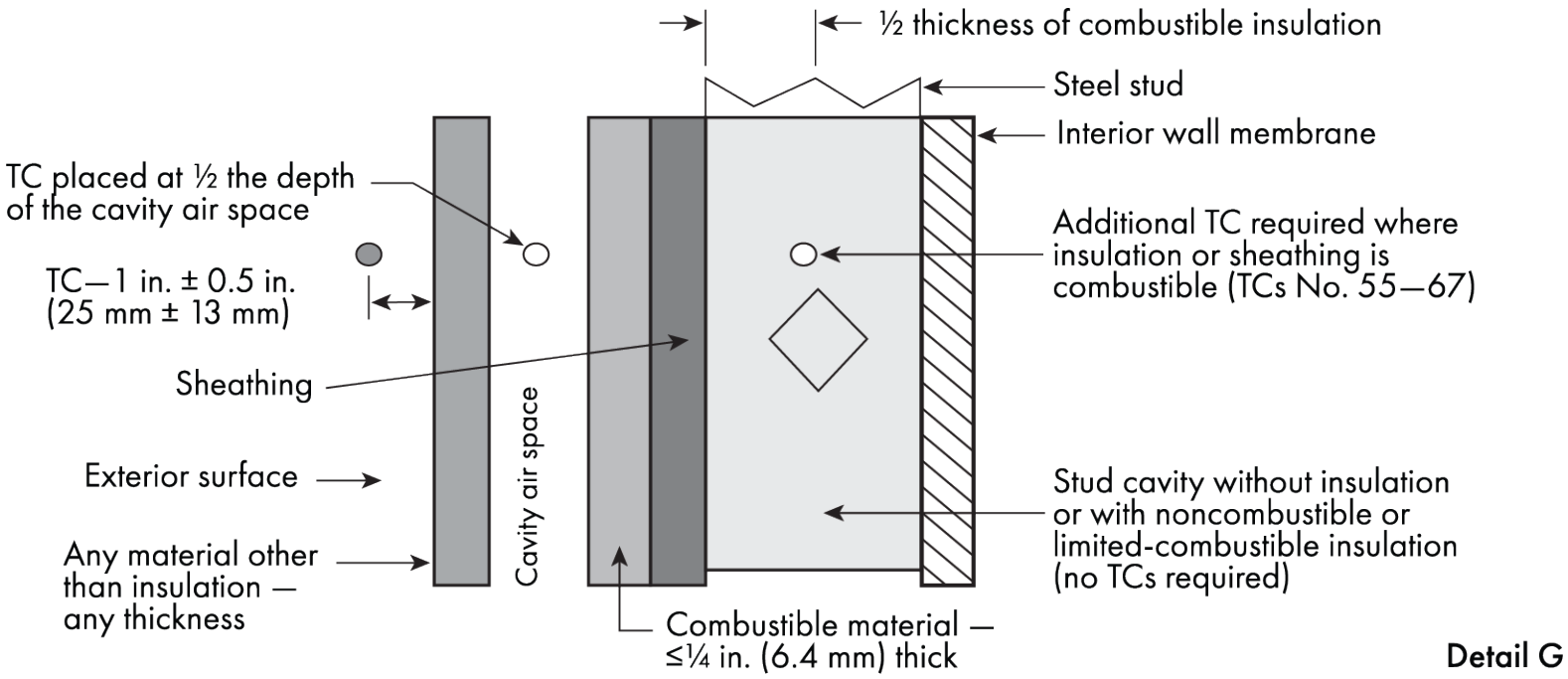

Detail G

Wall Types

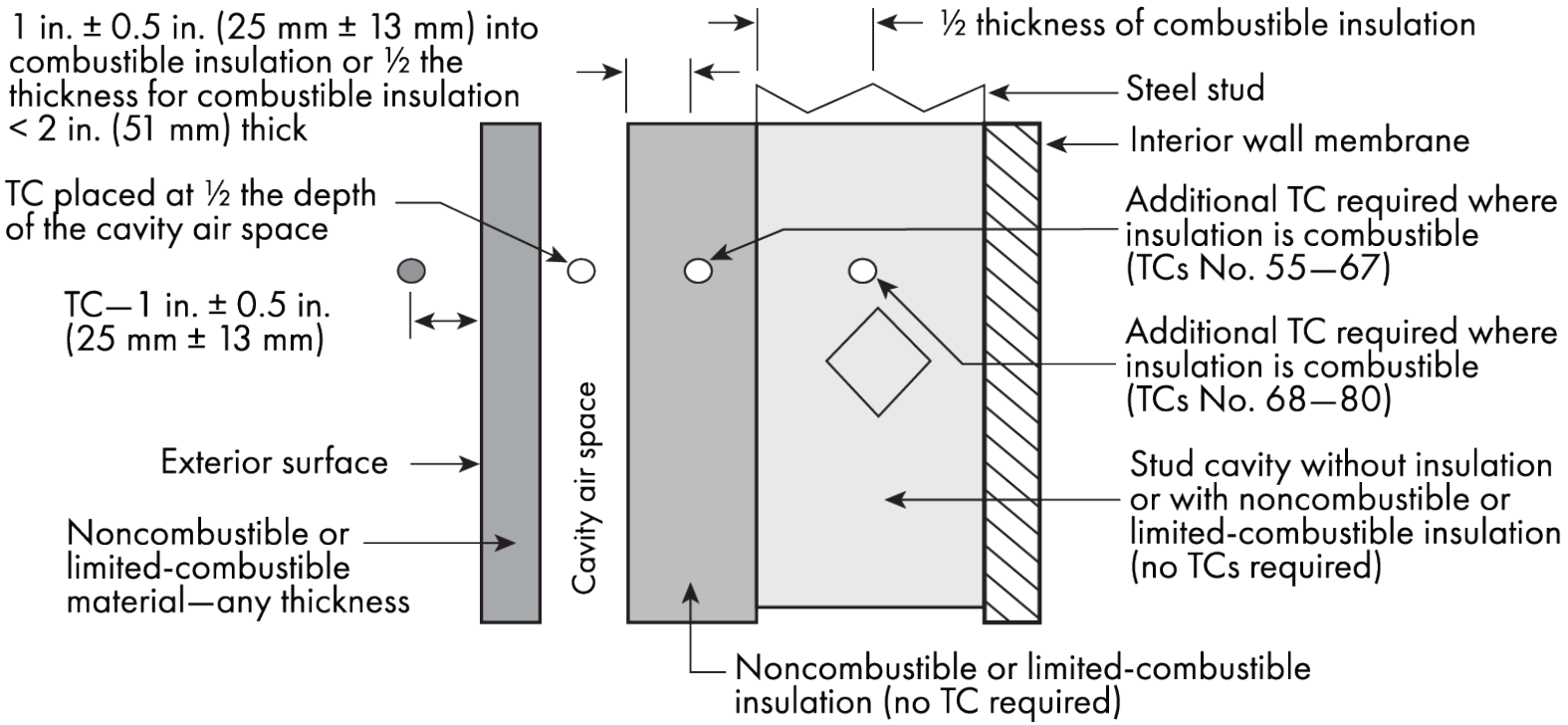

Detail I

Specifications

When writing a specification for an exterior wall assembly that is 40 feet above grade, remember to require that it is NFPA-285 compliant when appropriate and that the system satisfies both the code requirements and achieves desired performance goals.

Another way to ensure product safety is to look for manufacturers that hold independent, third-party evaluations. The International Code Council Evaluation Service (ICC-ES) offers unbiased verification of MCM code compliance. MCM products that are supported with impartial, mainstream code- compliance reports are recommended.

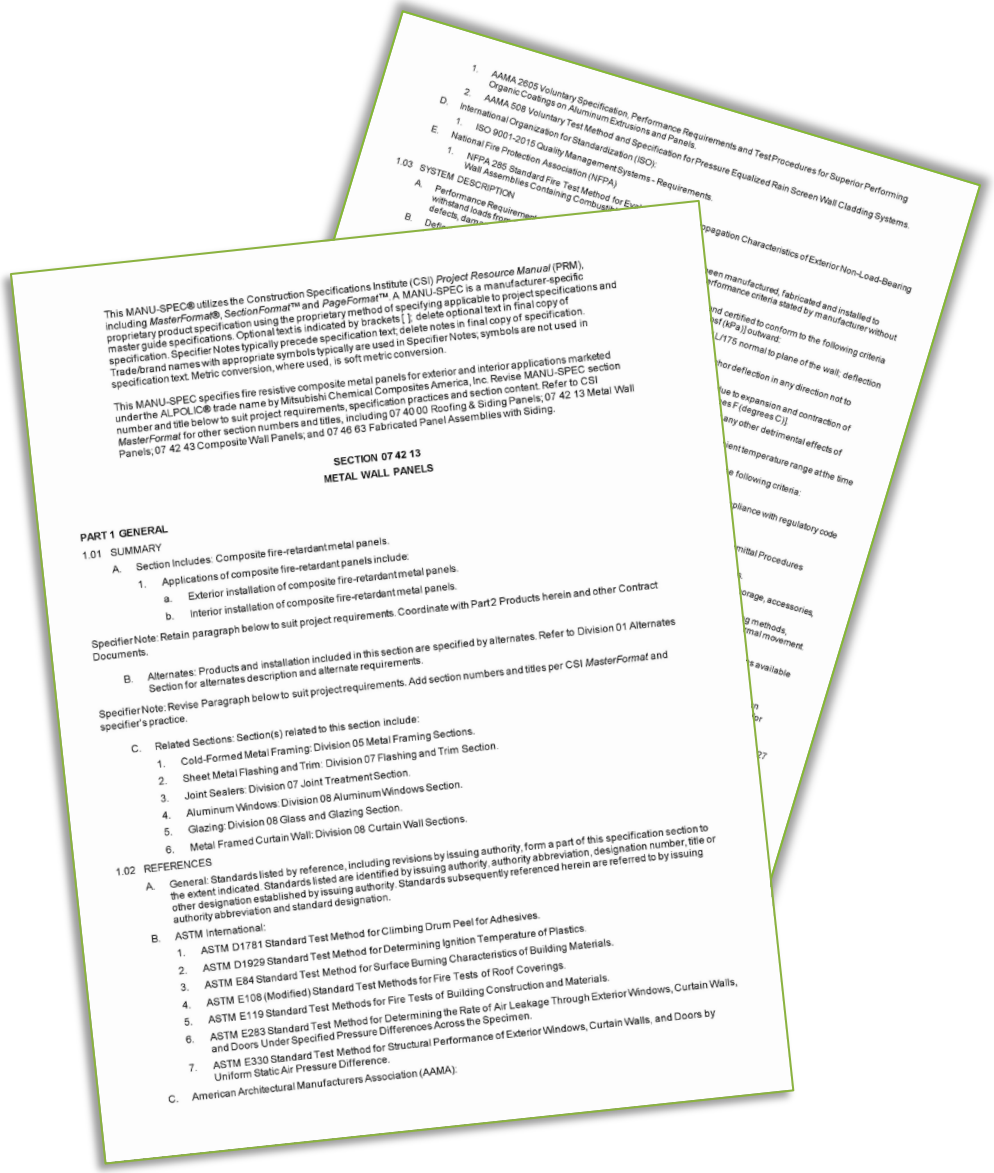

This MANU-SPEC® utilizes the Construction Specifications Institute (CSI) *Project Resource Manual* (PRM), including *MasterFormat®*, *SectionFormat*™ and *PageFormat*™. A MANU-SPEC is a manufacturer-specific proprietary product specification using the proprietary method of specifying applicable to project specifications and master guide specifications. Optional text is indicated by brackets [ ]; delete optional text in final copy of specification. Specifier Notes typically precede specification text; delete notes in final copy of specification. Trade/brand names with appropriate symbols typically are used in Specifier Notes; symbols are not used in specification text. Metric conversion, where used, is soft metric conversion.

This MANU-SPEC specifies fire resistive composite metal panels for exterior and interior applications marketed under the ALPOLIC® trade name by Mitsubishi Chemical Composites America, Inc. Revise MANU-SPEC section number and title below to suit project requirements, specification practices and section content. Refer to CSI *MasterFormat* for other section numbers and titles, including 07 40 00 Roofing & Siding Panels; 07 42 13 Metal Wall Panels; 07 42 43 Composite Wall Panels; and 07 46 63 Fabricated Panel Assemblies with Siding.

SECTION 07 42 13
METAL WALL PANELS

PART 1 GENERAL

1.01 SUMMARY
- A. Section Includes: Composite fire-retardant metal panels.
  - 1. Applications of composite fire-retardant metal panels include:
    - a. Exterior installation of composite fire-retardant metal panels.
    - b. Interior installation of composite fire-retardant metal panels.

Specifier Note: Retain paragraph below to suit project requirements. Coordinate with Part 2 Products herein and other Contract Documents.

- B. Alternates: Products and installation included in this section are specified by alternates. Refer to Division 01 Alternates Section for alternates description and alternate requirements.

Specifier Note: Revise Paragraph below to suit project requirements. Add section numbers and titles per CSI *MasterFormat* and specifier's practice.

- C. Related Sections: Section(s) related to this section include:
  - 1. Cold-Formed Metal Framing: Division 05 Metal Framing Sections.
  - 2. Sheet Metal Flashing and Trim: Division 07 Flashing and Trim Section.
  - 3. Joint Sealers: Division 07 Joint Treatment Section.
  - 4. Aluminum Windows: Division 08 Aluminum Windows Section.
  - 5. Glazing: Division 08 Glass and Glazing Section.
  - 6. Metal Framed Curtain Wall: Division 08 Curtain Wall Sections.

1.02 REFERENCES
- A. General: Standards listed by reference, including revisions by issuing authority, form a part of this specification section to the extent indicated. Standards listed are identified by issuing authority, authority abbreviation, designation number, title or other designation established by issuing authority. Standards subsequently referenced herein are referred to by issuing authority abbreviation and standard designation.
- B. ASTM International:
  - 1. ASTM D1781 Standard Test Method for Climbing Drum Peel for Adhesives.
  - 2. ASTM D1929 Standard Test Method for Determining Ignition Temperature of Plastics.
  - 3. ASTM E84 Standard Test Method for Surface Burning Characteristics of Building Materials.
  - 4. ASTM E108 (Modified) Standard Test Methods for Fire Tests of Roof Coverings.
  - 5. ASTM E119 Standard Test Methods for Fire Tests of Building Construction and Materials.
  - 6. ASTM E283 Standard Test Method for Determining the Rate of Air Leakage Through Exterior Windows, Curtain Walls, and Doors Under Specified Pressure Differences Across the Specimen.
  - 7. ASTM E330 Standard Test Method for Structural Performance of Exterior Windows, Curtain Walls, and Doors by Uniform Static Air Pressure Difference.
- C. American Architectural Manufacturers Association (AAMA):
  - 1. AAMA 2605 Voluntary Specification, Performance Requirements and Test Procedures for Superior Performing Organic Coatings on Aluminum Extrusions and Panels.
  - 2. AAMA 508 Voluntary Test Method and Specification for Pressure Equalized Rain Screen Wall Cladding Systems.
- D. International Organization for Standardization (ISO):
  - 1. ISO 9001-2015 Quality Management Systems - Requirements.
- E. National Fire Protection Association (NFPA)
  - 1. NFPA 285 Standard Fire Test Method for Evaluation of Flame Propagation Characteristics of Exterior Non-Load-Bearing Wall Assemblies Containing Combustible Components.

1.03 SYSTEM DESCRIPTION
- A. Performance Requirements: Fabricated and installed panels to withstand loads from wind pressure, certified to conform to the following criteria defects, damage or failure of performance criteria stated by manufacturer without [kPa]] outward.
- B. Deflection: [175 normal to plane of the wall; deflection

Conclusion

International fire events have drawn focus on combustible materials in the wall assembly. **It is important to distinguish the resiliency of the U.S. and Canadian code because of their robust standards and attentive examination of both the building construction and fire code requirements.**

These provisions are comprehensive. And while some have found them potentially confusing, this need not be the case.

Wall cladding featuring MCM over 40 feet from grade must use a fire-resistant core and be fabricated in an assembly that can pass the NFPA 285.

Thank You for Your Time

This concludes The American Institute of Architects Continuing Education Systems Program.

AIA Continuing Education Provider

More Information

For more information about MCM design and specifying, please visit

www.alpolic-americas.com/documents